Contactless, high-efficiency, high-torque transmission with inherent overload protection

At the heart of Zilift TorqueDrive technology lies the Torque Converter, a unique device which allows the motor to run efficiently at higher operating speeds whilst delivering increased torque and reduced speed to the pump.

The high-torque magnetic gear was invented and demonstrated by Dr Kais Atallah from the University of Sheffield in 2001. This pioneering research was been extended by Zilift and Magnomatics to provide a downhole variant of this gear technology.

Principle of operation

A magnetic gear torque converter uses permanent magnets to transmit torque between an input and output shaft without mechanical contact. Torque densities comparable with mechanical gears can be achieved with an efficiency >99% at full load and with much higher part load efficiencies than a mechanical gear. For higher power ratings a magnetic gear will be smaller, lighter and lower cost than a mechanical gear.

A magnetic gear consists of two rings of permanent magnets with a ring of steel pole pieces in between. These steel pole pieces act as flux paths from each of the rings of magnets. This has the effect of creating harmonics in the fields produced by each ring of magnets. By careful selection of pole numbers one can couple to the harmonic field and this creates a gear ratio. One element of the gear is held still whilst the other two rotate.

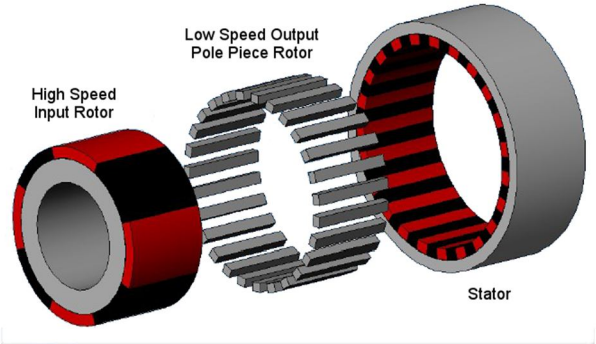

Ratio of magnetic materials and steel pole pieces determines the magnetic gear ratio – for example:

23 pole pair magnets in the stator

27 steel pole pieces providing the flux path

4 pole pair on the high speed input rotor

Resulting gear ratio = 1 : 23 / 4 = 5.75

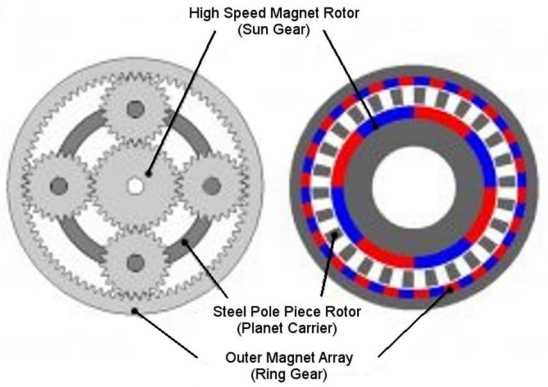

The operation of this gear assembly is analogous to a planetary or epicyclical gear assembly, with the inner rotor acting as the sun gear, the outer rotor as a ring gear, and the steel pole pieces acting as planetary gears.

Since there is no mechanical contact due to meshing parts there is no wear and lubrication is not required.

Product Bulletin
Zilift Torque Converter

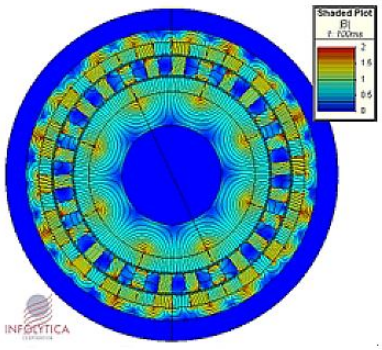

The diagram (left) displays the flux lines and the shaded plot of the magnetic flux density as the gears rotate. The operation of the gears can be seen from the plot of flux lines (right), which shows the magnetic field in the pole pieces focusing the magnetic flux from the outer ring inwards towards the high speed rotor.

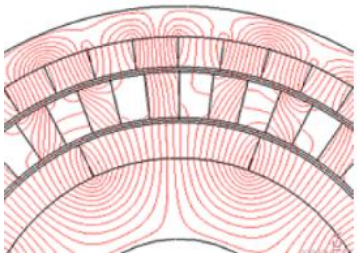

Inherent overload protection

Magnetic gears inherently protect against overloads by harmlessly slipping if an overload torque is applied, and automatically and safely reengaging when the fault torque is removed.

The torque transmission capability is evaluated with another simulation that runs the inner rotor at constant speed, while gradually increasing the load on the outer rotor. When the load exceeds the torque limit of the magnetic gears, the outer rotor starts to slip. Before this point, the outer rotor will lag the inner rotor and, in fact, the relation between torque and lag is approximately sinusoidal, with a period equal to twice the rotor magnet spacing.

Advantages over mechanical gears

- Reduced maintenance and improved reliability
- Lubrication free
- Higher efficiency than conventional gears
- Precise peak torque transmission
  - torque transmission is a function of active magnetic length
- Inherent overload protection
- Physical isolation between input and output shafts
- Inherent anti-jamming transmission
- Significantly reduces harmful drivetrain pulsations
- Allows for misalignment/vibration of shafts
- Very low acoustic noise and vibration

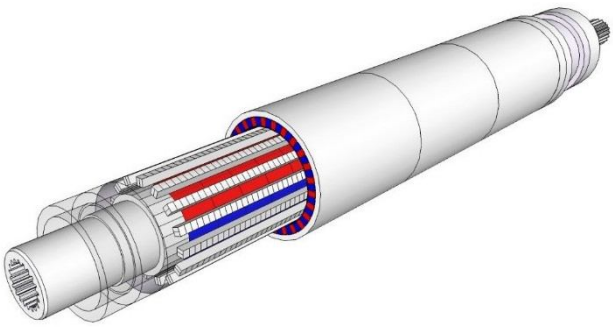

Contact Zilift	UK / Europe	US / Canada
Company :	Zilift Ltd.	Zilift Inc.
Telephone :	+44 1224 227 227	+1 661 369 8579
Email :	info@zilift.com	